Apartment Kitchen Cabinets

Multifamily Apartments
Student Housing Apartments
Senior Living Apartments

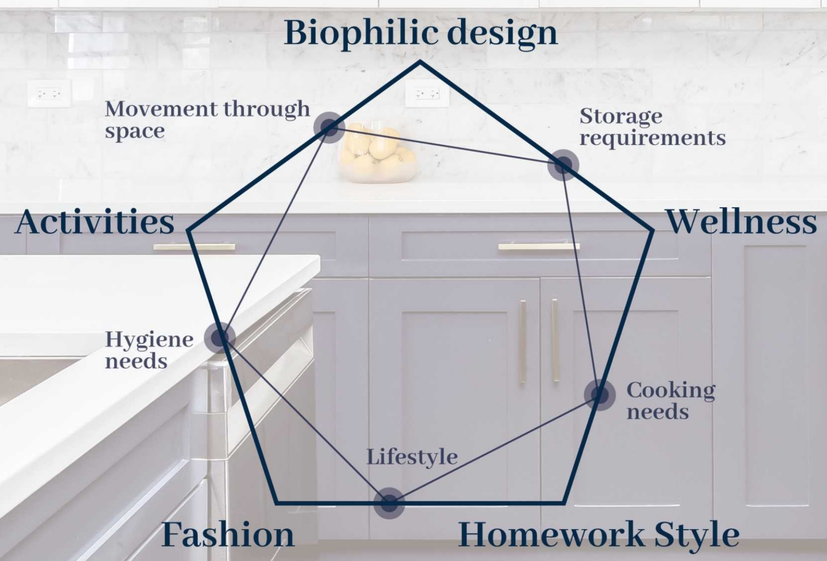

Kitchen Cabinets

Apartment Collection

Monochromatic Flat Kitchen Cabinets

- All in beige wood grain flat doors
- Subway tiles back splash
- Metal frame open shelf
- Matte Black door pulls

Square Pulls
H6165-MB128

Monochromatic Flat Kitchen Cabinets

- High glossy white flat doors
- Subway tea color back splash
- Polished chrome door pulls

Square Pulls
H6165-PC128

Styling Dark Flat Kitchen Cabinets

- Warm Wood Grain Flat Doors
- Subway tiles

Finger Pulls
H3306-SN96

Styling Dark Flat Kitchen Cabinets

- Dark Wood Grain Flat Doors
- Full Back Splash

Monochromatic Shaker Kitchen Cabinets

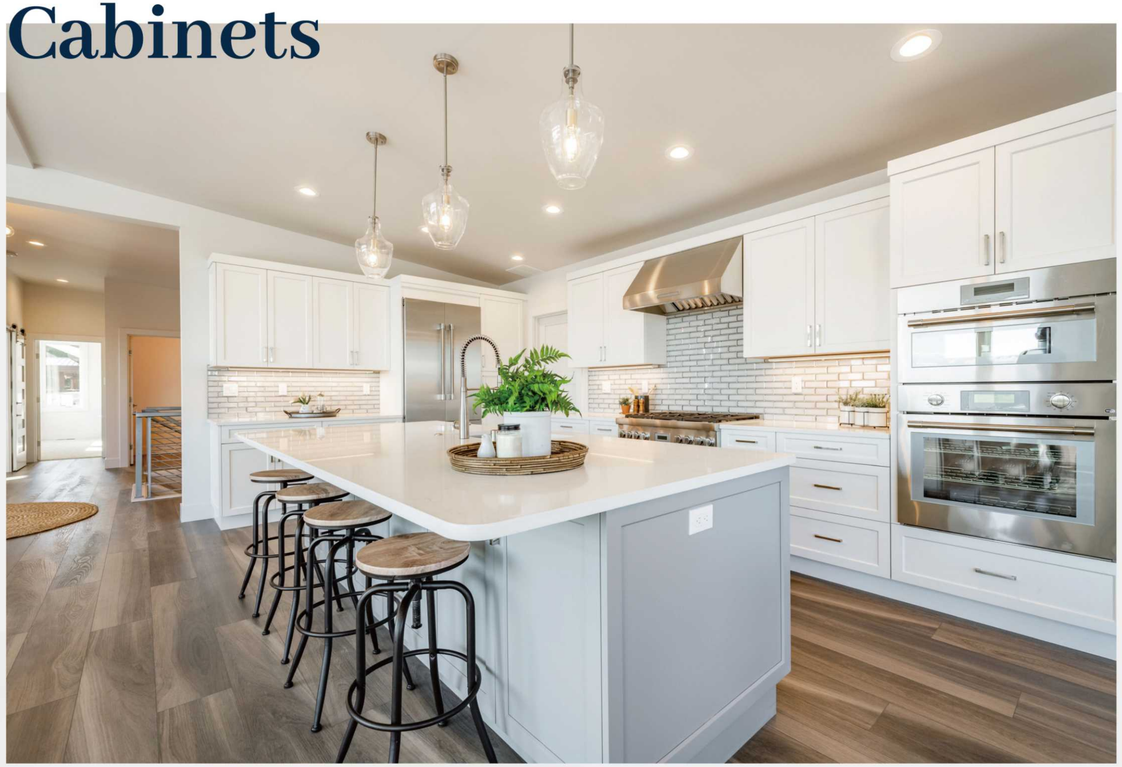

Sculpted Pulls
E8291-PC128

- Shaker door style
- Subway tile back splash
- Polished chrome door pulls
- All doors in white color

Monochromatic Shaker Kitchen Cabinets

- Light Grey Shaker door style
- Subway tile back splash
- Matte Black door pulls
- Wood open shelf

T-Bar Pulls
H6158-MB96

Monochromatic Shaker Kitchen Cabinets

Crescent Pulls
H6161-MB128

- Light Green Shaker door style
- Full back splash
- Matte Black door pulls
- All doors in one color

Monochromatic Shaker Kitchen Cabinets

T-Bar Pulls
H6158-RG128

- All in Light blue color
- Subway tile back splash
- Door pulls and faucets in rose gold
- Wood open shelf

Two-toned Kitchen Cabinets

- Waterfall Island Cabinets
- Full Back Splash
- Base and island cabinets the same color

Square Pulls
H6165-MB128

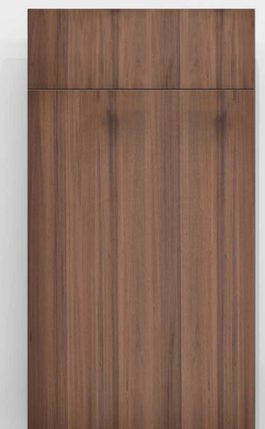

Two-toned Kitchen Cabinets

- Subway tile back splash
- Base and island cabinets in dark blue color
- Golden door pulls and faucets

Square Pulls
H6190-RG128

Two-toned Kitchen Cabinets

- Full back splash
- Light grey upper and lower cabinets
- Island cabinets in dark blue color
- Waterfall island cabinets

- Subway tile back splash
- Decorative open shelf
- Plants for green kitchen

- Subway tile back splash
- Matte Black upper and lower cabinets
- Island cabinets in neutral beige color
- Polished chrome pulls and faucets

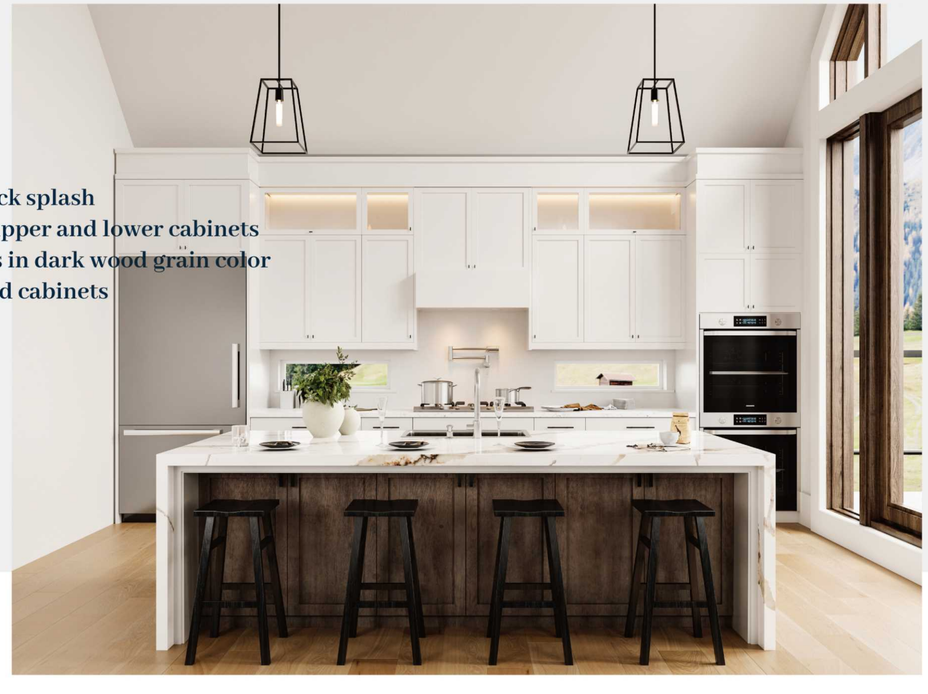

- Subway tile back splash
- White shaker upper and lower cabinets
- Island cabinets in dark wood grain color
- Waterfall island cabinets

Floating Shelf

Metal frame open shelf

Metal Frame Open Shelf

Wood frame open shelf

Apartment

Kitchen Cabinets

New features in the kitchen cabinets

1. Decorative Open Shelf
2. From all white to neutral colors
3. Two-toned cabinets
4. Waterfall island cabinets
5. Full Stone Backsplash
6. Dark Wood Grains
7. Green plants, green home

Multifamily

Apartments

Studio Units
1 Bed 1 Bath Units
2 Beds 1 Master Bath 1 Bath Units
3 Beds 1 Master Bath 1 Bath Units

Senior Living

Apartments

Memory Care Units
Independent Living Units
Assisted Living Units

Student Housing

Apartments

1 Bed 1 Bath Unit
2 Beds 2 Baths Units
3 Beds 3 Baths Units
4 Beds 4 Baths Units
5 Beds 5 Baths Units

Thermofoil · Melamine Colors

DXSD1 MWM1 DXSD2 GGD50 GGD61

GGD29 GGD35 MWM108 MWM6 MWM16

MWT05 MWT11 MWT14 MWT22 MWT25

MWM50 MWT30 MWT38 MWT55 MWT49

Thermofoil · Melamine Flat Doors

linen

Stone

Silk

Espresso

Thermofoil · Melamine Profile Doors

Shaker

Marquis

Marquis

Frameless Box Constructure

Finger Pulls

H3657-OB96

H3306-OB96

H3659-MB96

H3306-RG96

Knobs / Cups

D3037

E8018

PC=Polished chrome
SN=Satin Nickel
BN=Brushed Nickel
MB=Matte Black

OB=Oiled Bronze
VB=Verona Bronze
RG=Rose Gold

Square / Arch Pulls

D3181-MB96-128

H6161-PC96-128

H6165-PC128

E8291-MB128

R570-SN96

H6165-MB128

Bar Pulls

H6158-SN96-192

H6158-RG96-224

Wall Cabinets

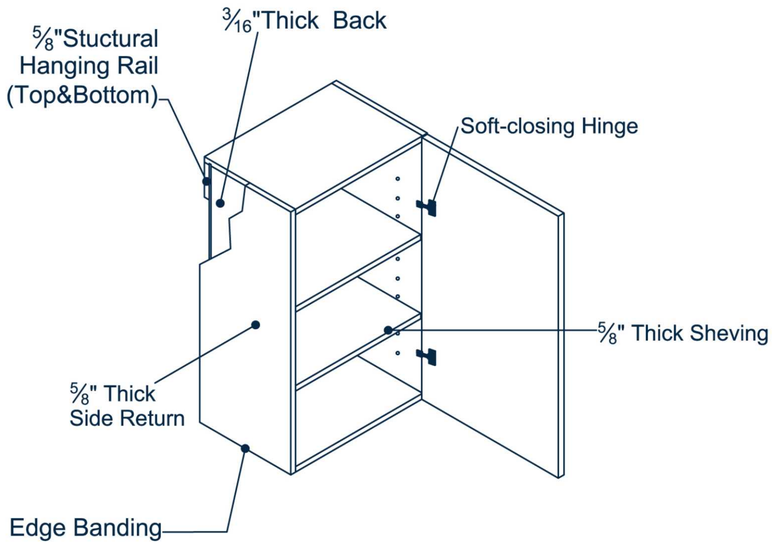

Sides:
5/8-in Thick Side Return.

Drawers:
5-pieces construction.

Shelves:
5/8-in Thick.

Toe Kick:
Structural toe kick plus 3/16" MDF toe kick.

Drawer Glides:
Standard ball bearing Full Extension Glide.

Hinges:
Soft-closing Hinge.

Base Cabinets

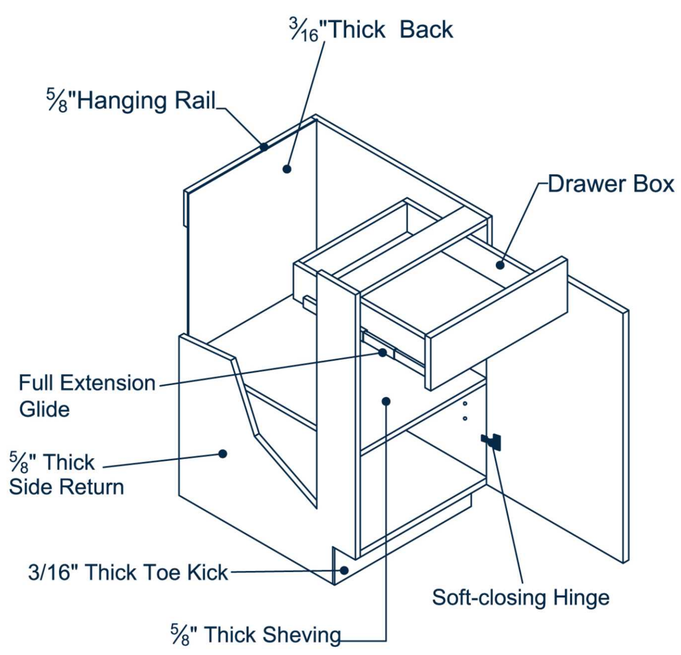

Soft-closing Hinge

Model reference:
F06A

Material:
Steel Cup, nickel plated;

Angle of opening:
100 degree;

Full extension Glide

Slide width:
45mm

Side Mounted

Load Rating:
75lbs

Thickness of the material:
1.2x1.0x1.0mm ;